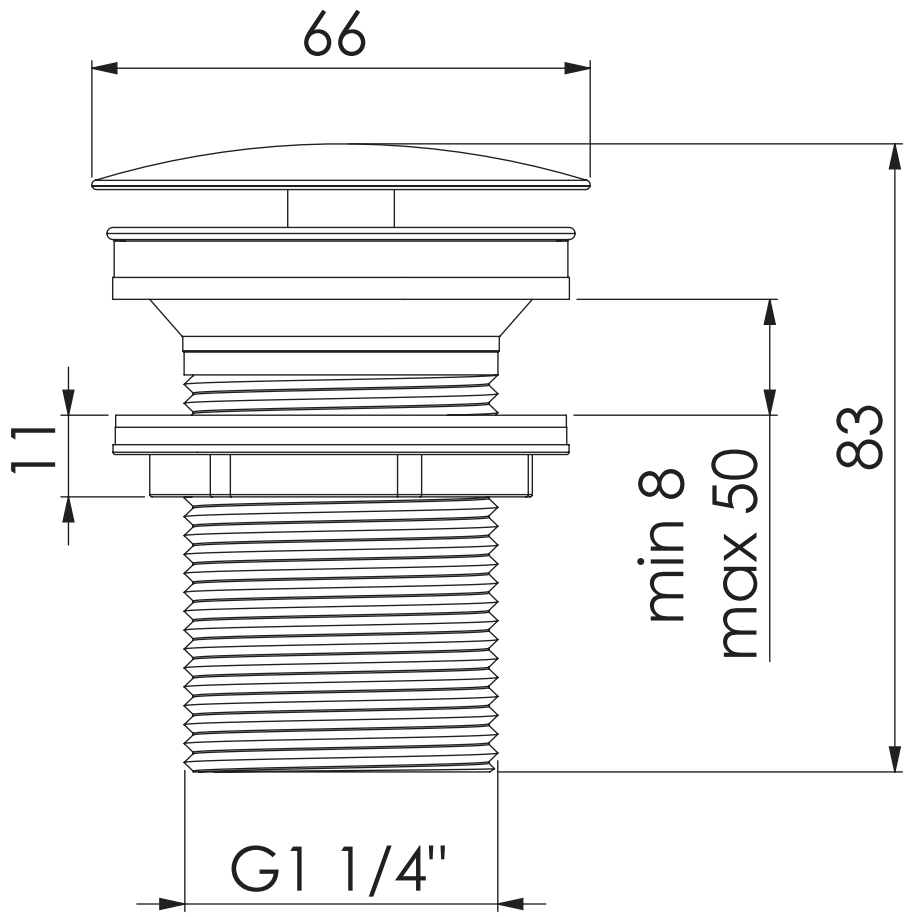

100 1693 BG

STEINBERG