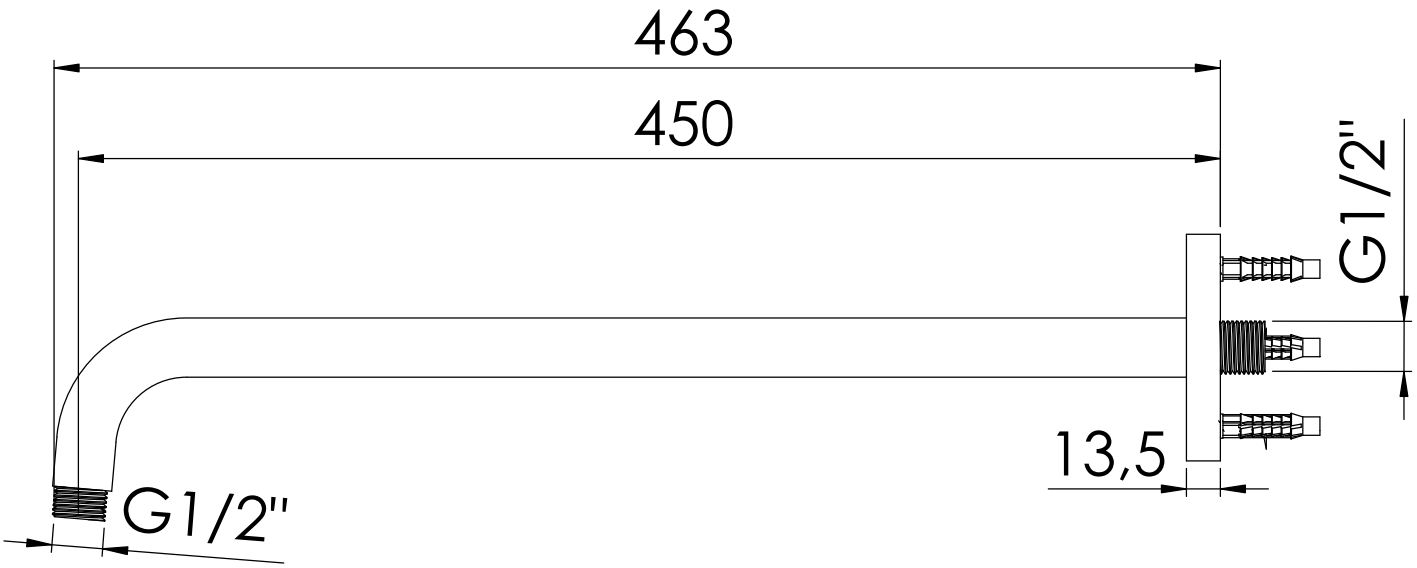

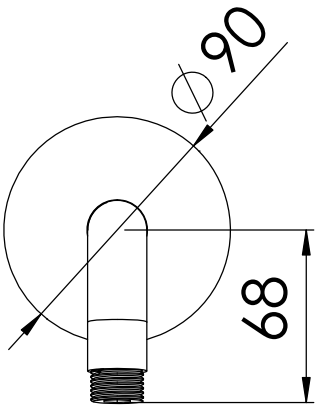

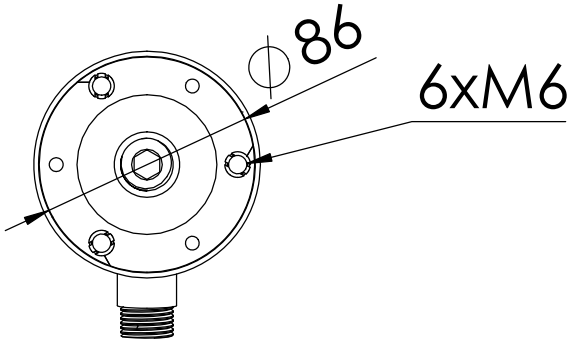

STEINBERG