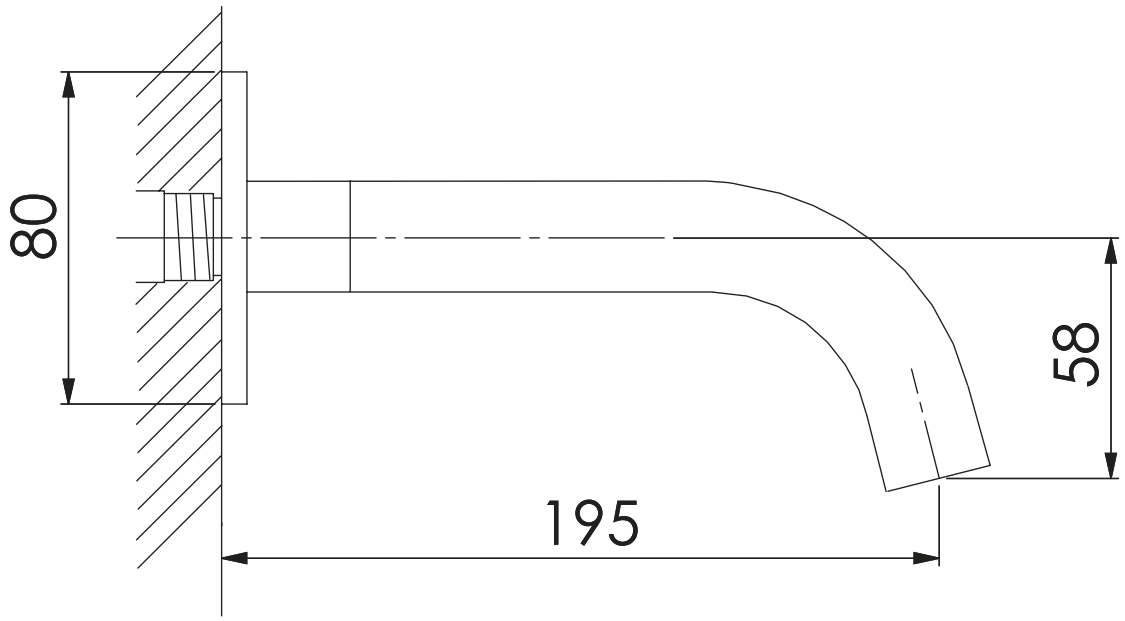

100 2310 RG

STEINBERG